INPLUS
AUTORYZOWANY DYSTRYBUTOR
www.simonelligroup.pl

PRODOTTI / RICAMBI
PRODUCTS / SPARE PARTS
PRODUITS / PIECES DETACHEES
PRODUKTE / ERSATZTEILE
PRODUCTOS / REPUESTOS

# APPIA life

COMPACT VERSION
01-2020

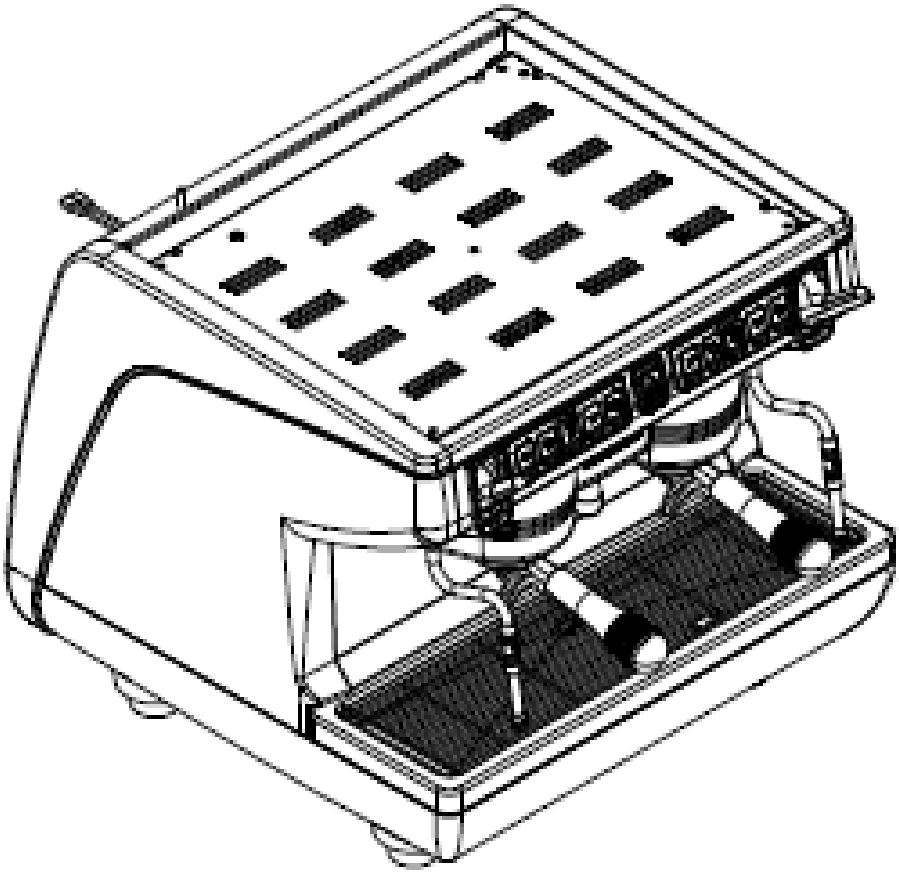

nuova SIMONELLI®

INPLUS
AUTORYZOWANY DYSTRYBUTOR
www.simonelligroup.pl

# INDICE

» TAV 01 - **COMPONENTI GRUPPO CARENA**
CABINET PARTS

» TAV 02 - **COMPONENTI GRUPPO INVOLUCRO COMANDI**
CONTROL PANEL PARTS

» TAV 03 - **COMPONENTI GRUPPO EROGAZIONE**
POURING UNIT GROUP PARTS

» TAV 04 - **COMPONENTI IDRAULICI**
HYDRAULIC PARTS

» TAV 05 - **COMPONENTI RUBINETTO VAPORE**
STEAM VALVE PARTS

» TAV 06 - **COMPONENTI RUBINETTO ACQUA CALDA**
HOT WATER VALVE PARTS

» TAV 07 - **COMPONENTI EASY CREAM**
EASY CREAM PARTS

» TAV 08 - **COMPONENTI GRUPPO IDRAULICO**
HYDRAULIC PARTS

» TAV 09 - **COMPONENTI GRUPPO CALDAIA**
BOILER GROUP PARTS

» TAV 10 - **COMPONENTI TELAIO**
FRAME PARTS

» TAV 11 - **COMPONENTI ELETTRICI ED ELETTRONICI**
ELECTRONIC & ELECTRIC PARTS

## » LEGENDA :

I CODICI SCRITTI IN GRASSETTO SI RIFERISCONO AI COMPONENTI IMPIEGATI ATTUALMENTE.

I CODICI IMPIEGATI PRIMA SONO SCRITTI IN CORSIVO CON INDICATA A FIANCO LA DATA DI FINE VALIDITA'.

ESEMPIO:

*07300127 (ϕ2.5) - 18/09/2017*
**07300226 (ϕ2)**

nuova SIMONELLI®

INPLUS
AUTORYZOWANY DYSTRYBUTOR
www.simonelligroup.pl

# COMPONENTI GRUPPO CARENA

## CABINET PARTS

APPIA LIFE COMPACT

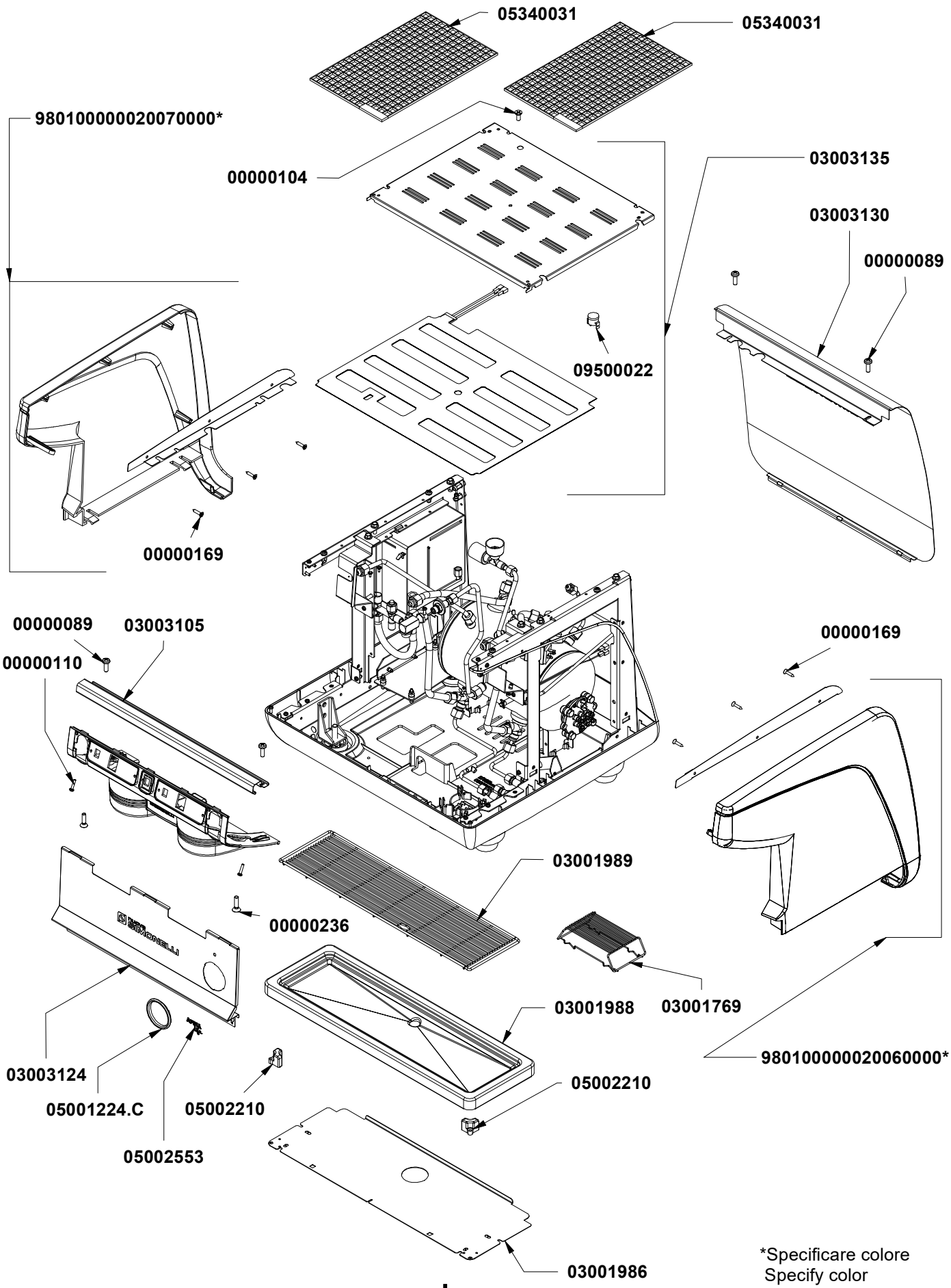


*Specificare colore
Specify color

SIMONELLI | GROUP

TAV. 01

# COMPONENTI GRUPPO INVOLUCRO COMANDI

## CONTROL PANEL PARTS

APPIA LIFE COMPACT

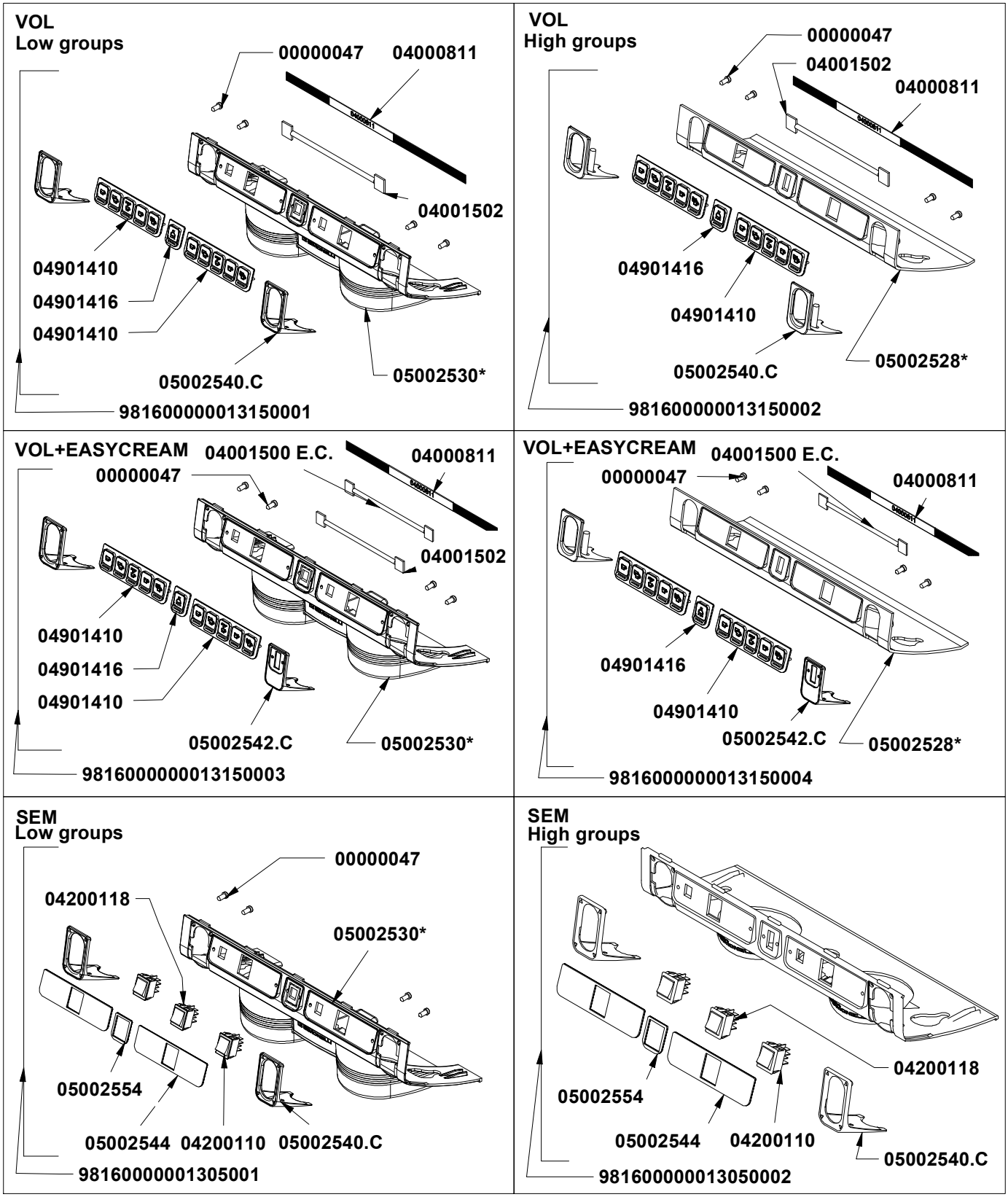

# COMPONENTI GRUPPO EROGAZIONE

## POURING UNIT GROUP PARTS

APPIA LIFE COMPACT

### LEFT POURING GROUP

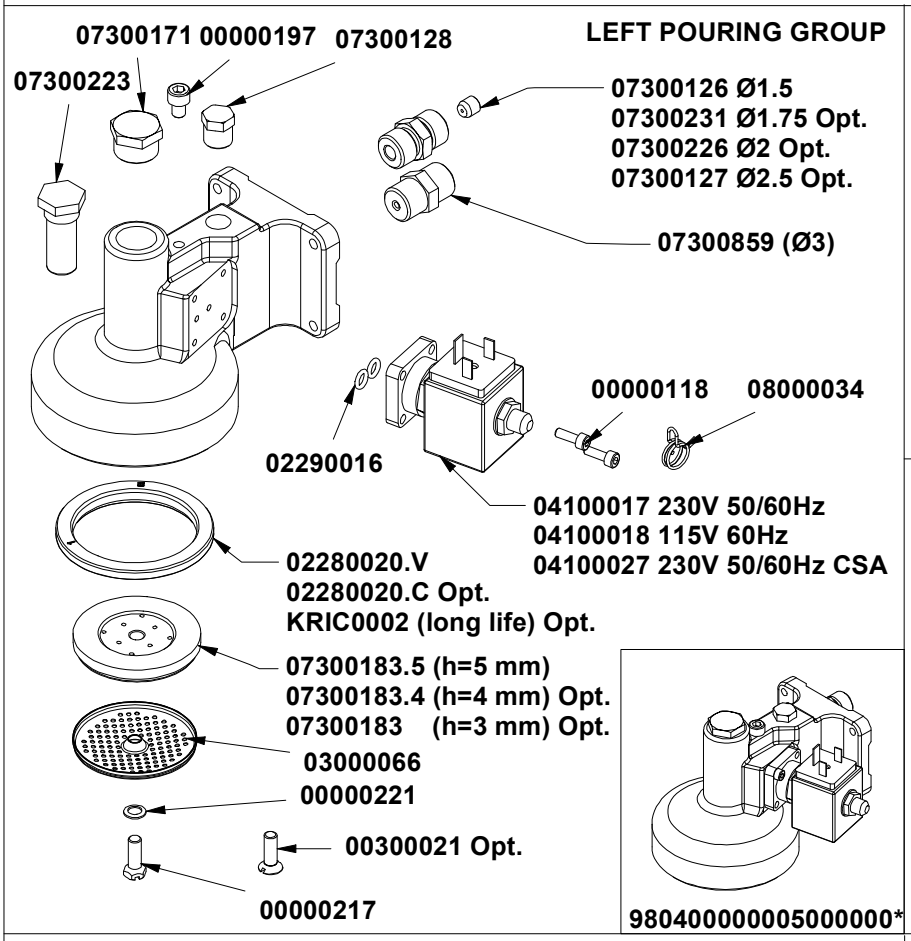


### HIGH GROUPS

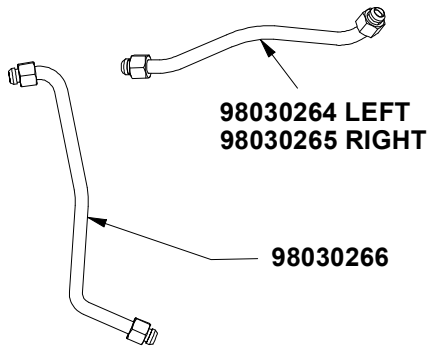


### LOW GROUPS

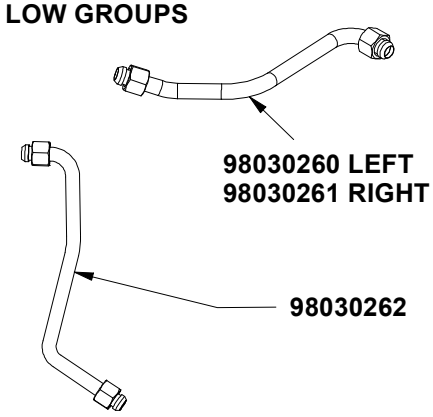


### RIGHT POURING GROUP

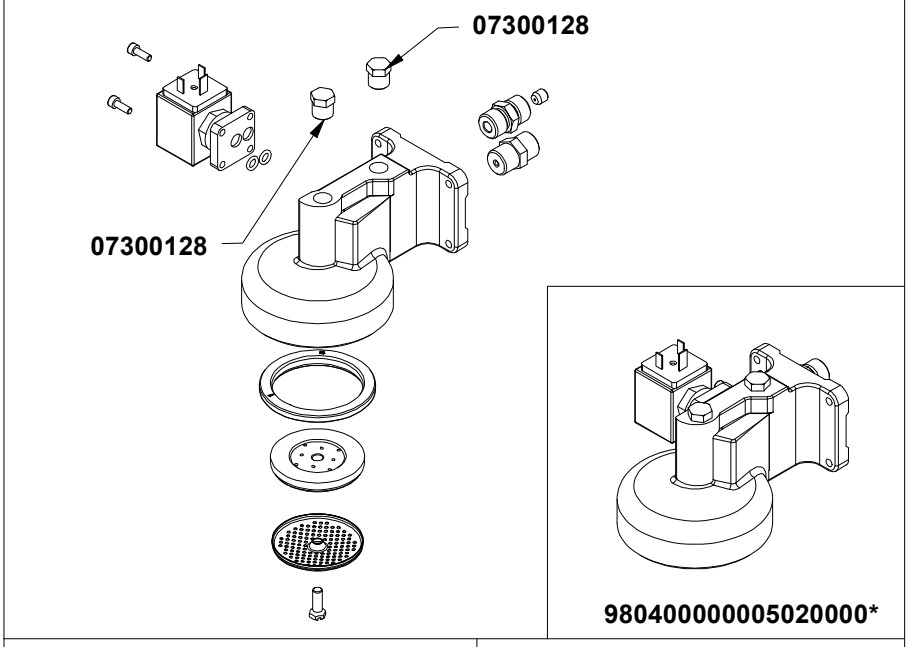


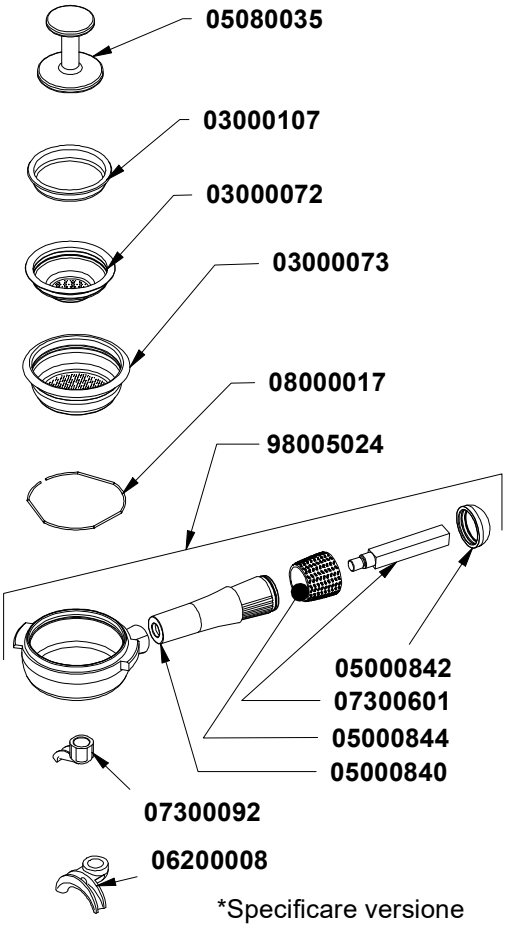


98005022

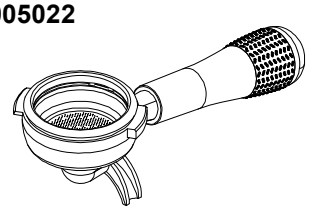

98005021

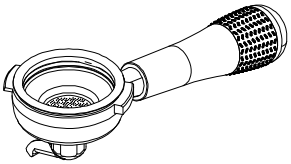

*Specificare versione
Specify version

SIMONELLI | GROUP

TAV. 03

# COMPONENTI IDRAULICI

## HYDRAULIC PARTS



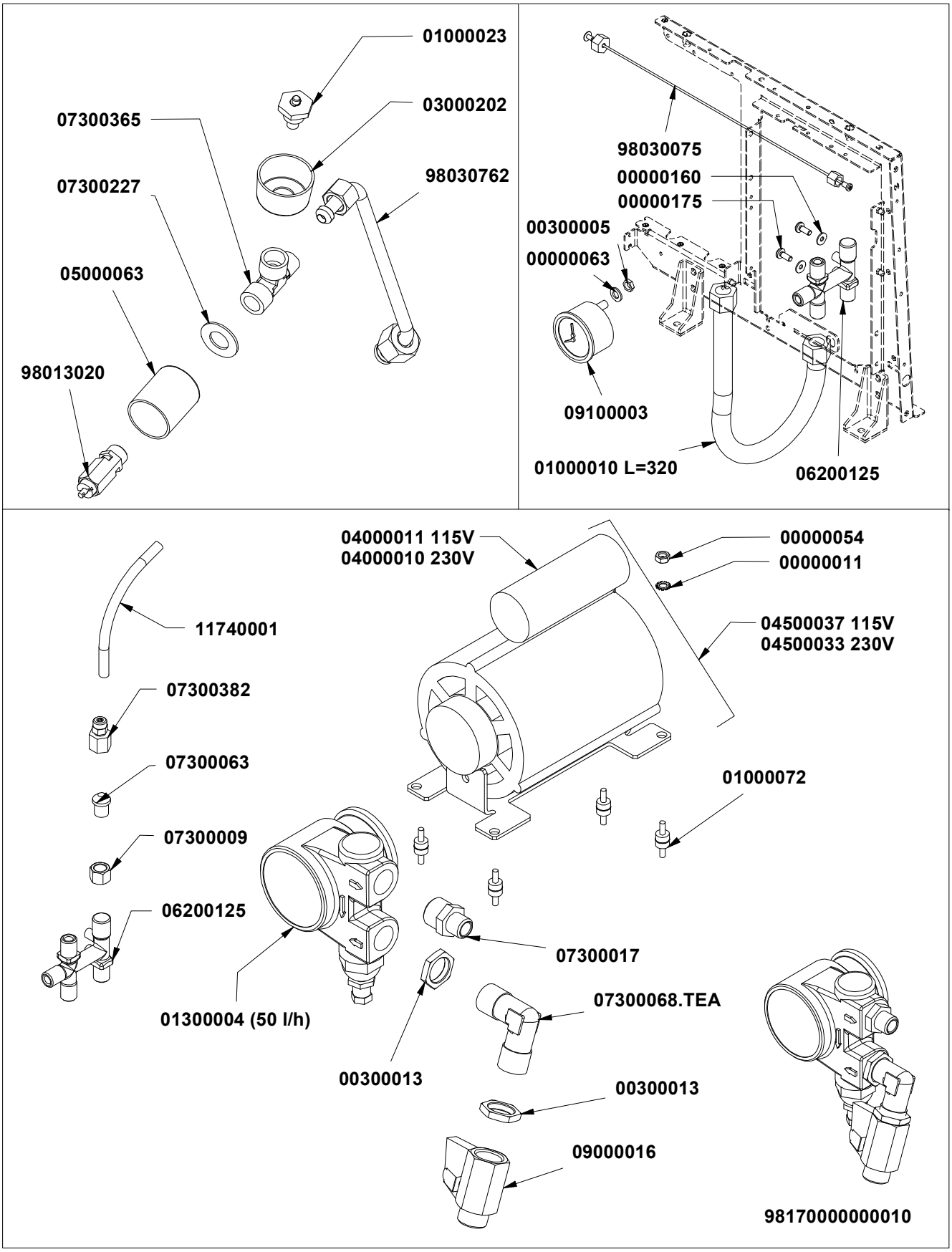

# COMPONENTI RUBINETTI VAPORE

## STEAM TAP COMPONENTS



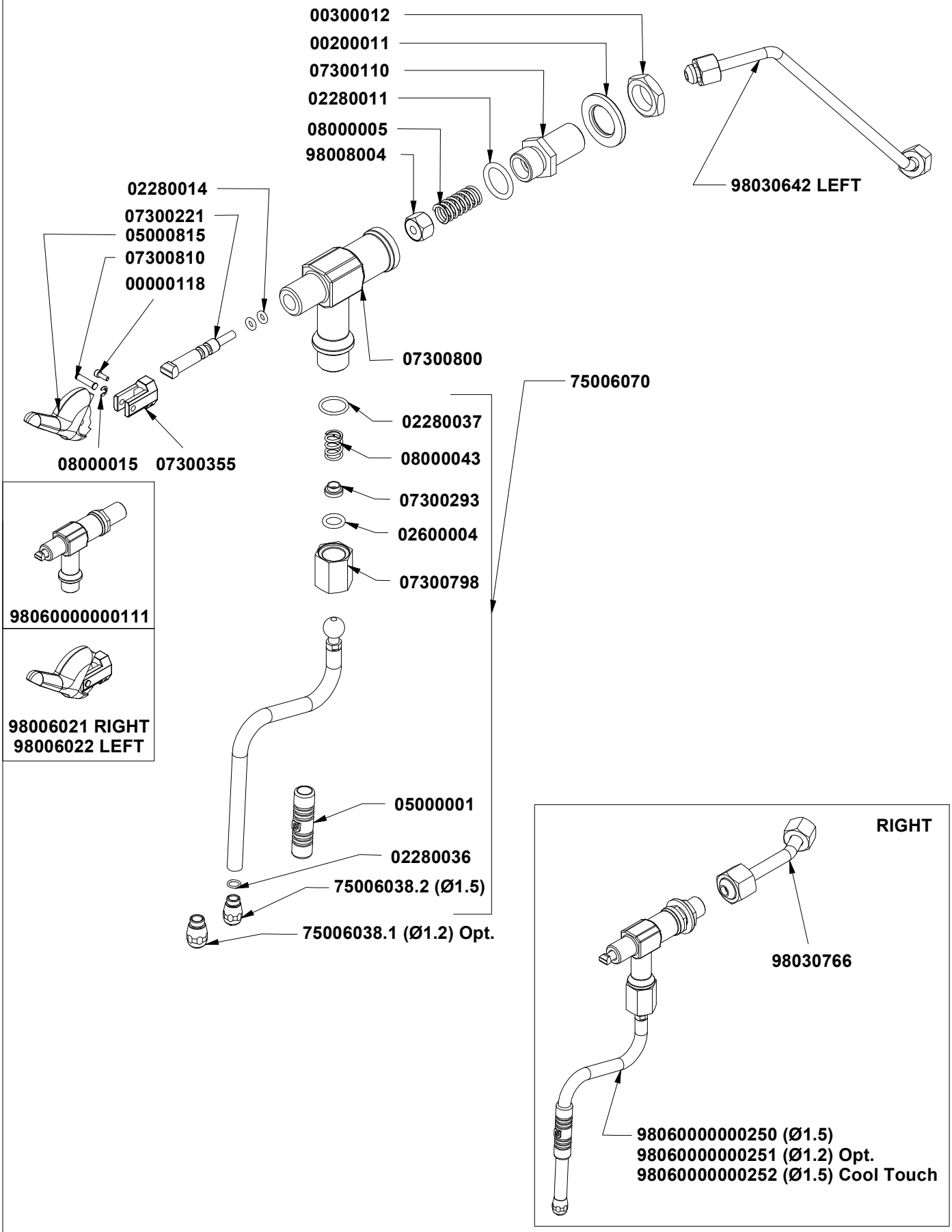

# COMPONENTI RUBINETTO ACQUA CALDA

## HOT WATER TAP COMPONENTS

APPIA LIFE COMPACT

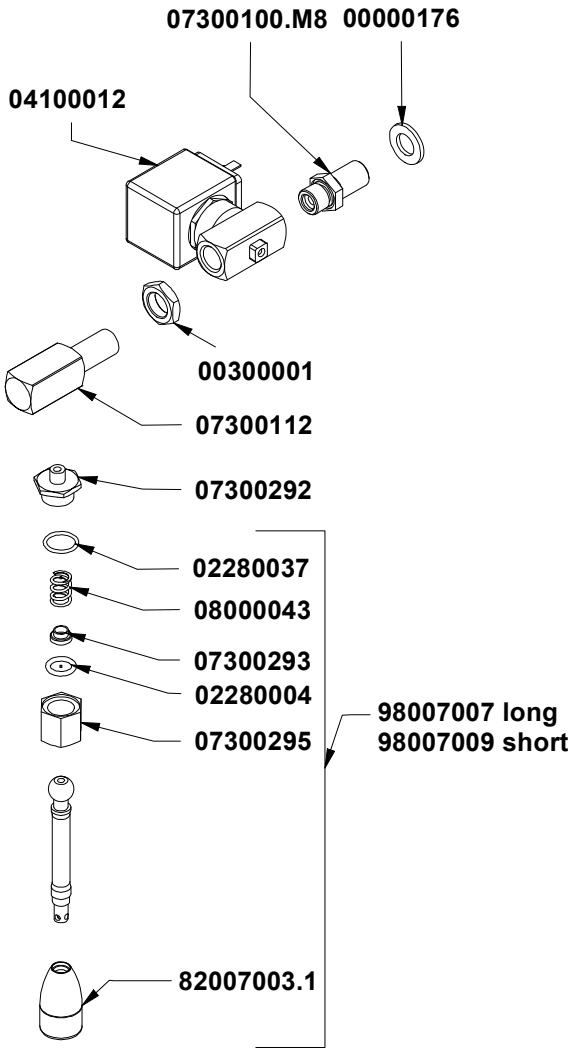


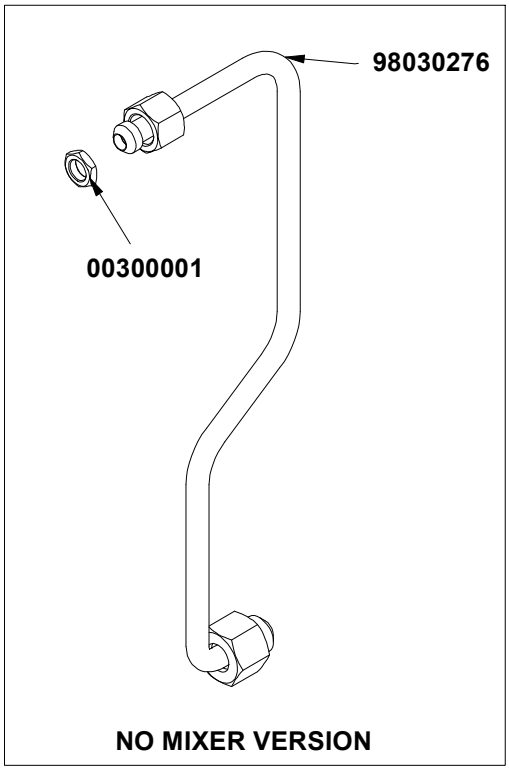


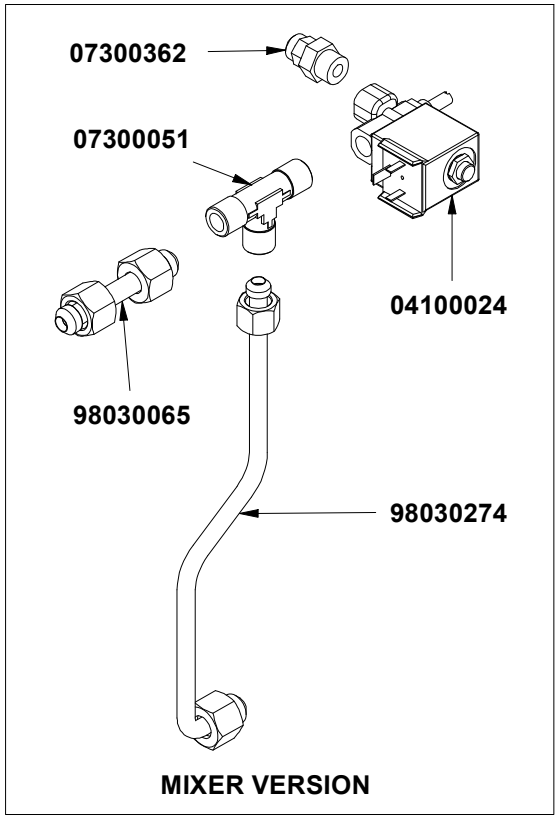

INPLUS
AUTORYZOWANY DYSTRYBUTOR
www.simonelligroup.pl

# COMPONENTI EASY CREAM

## EASY CREAM PARTS

APPIA LIFE COMPACT

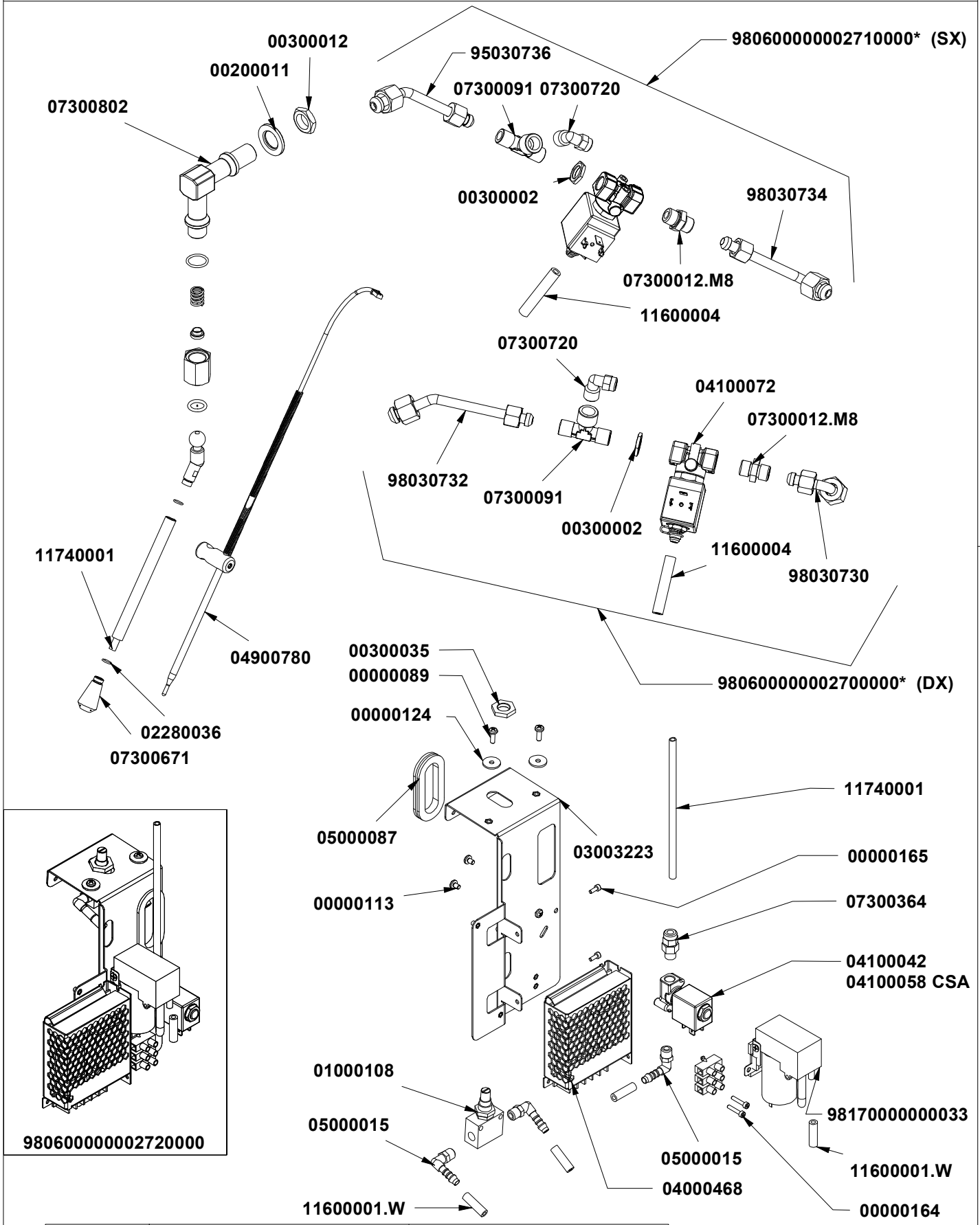


| CODE | DESCRIPTION | DESCRIZIONE |
|---|---|---|
| 04001510 | Wiring Easy Cream | Cablaggio Easy Cream |

* Specificare versione
Specify version

SIMONELLI | GROUP

TAV. 07

# COMPONENTI GRUPPO IDRAULICO

## HYDRAULIC GROUP PARTS

APPIA LIFE COMPACT

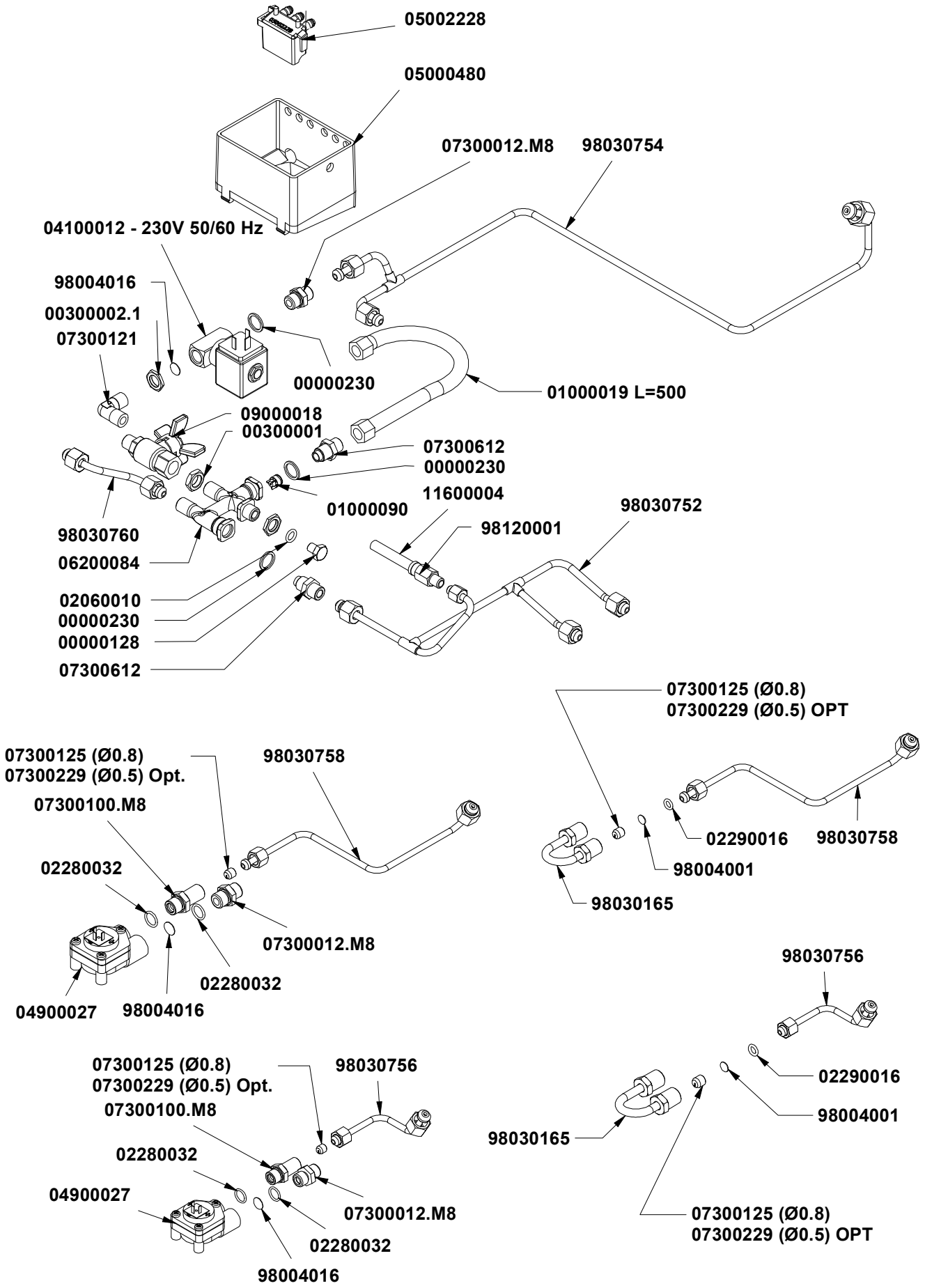


SIMONELLI | GROUP

TAV. 08

# COMPONENTI GRUPPO CALDAIA

## BOILER GROUP PARTS

APPIA LIFE COMPACT

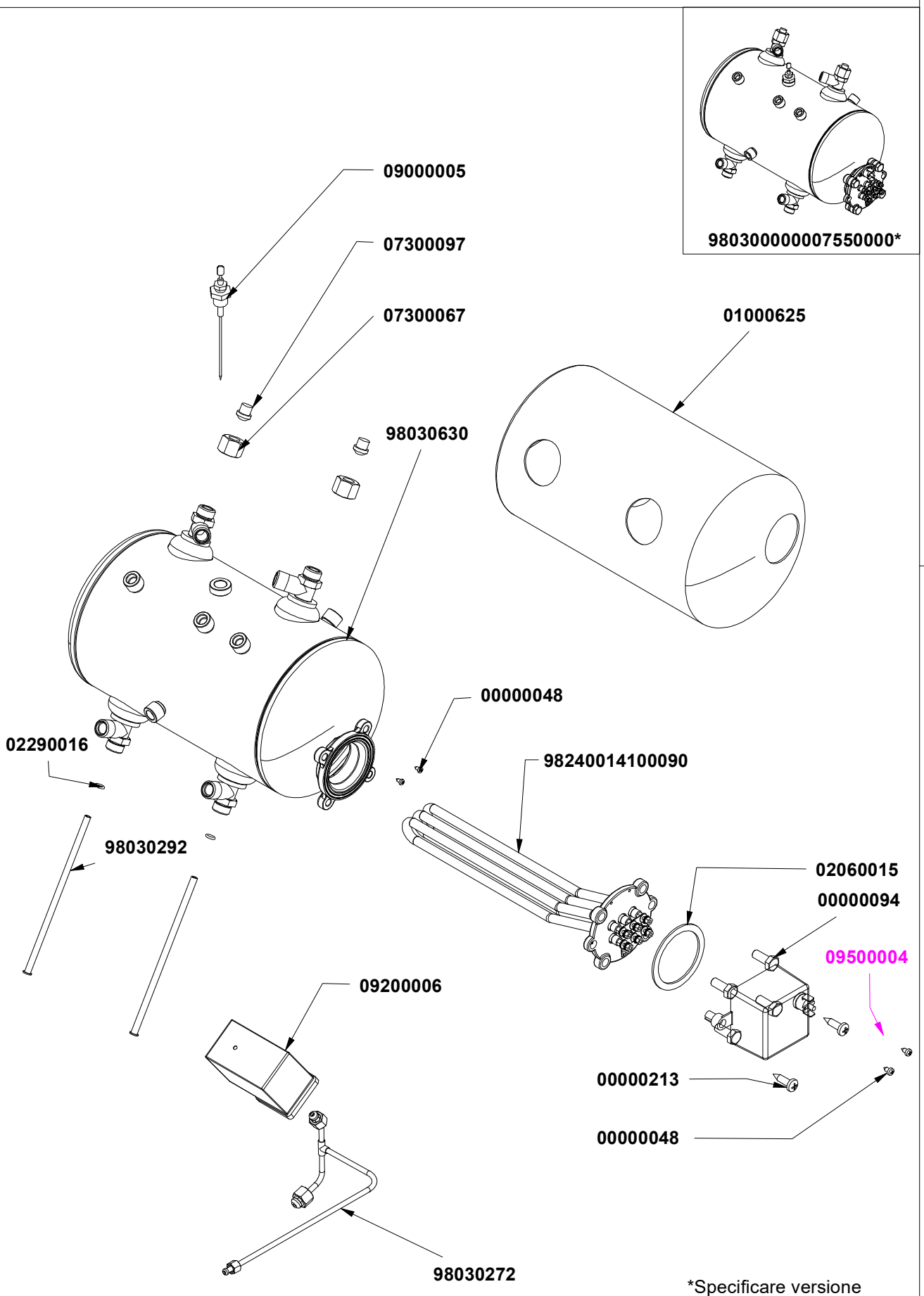


*Specificare versione
Specify version

SIMONELLI | GROUP

TAV. 09

# COMPONENTI TELAIO

## FRAME PARTS



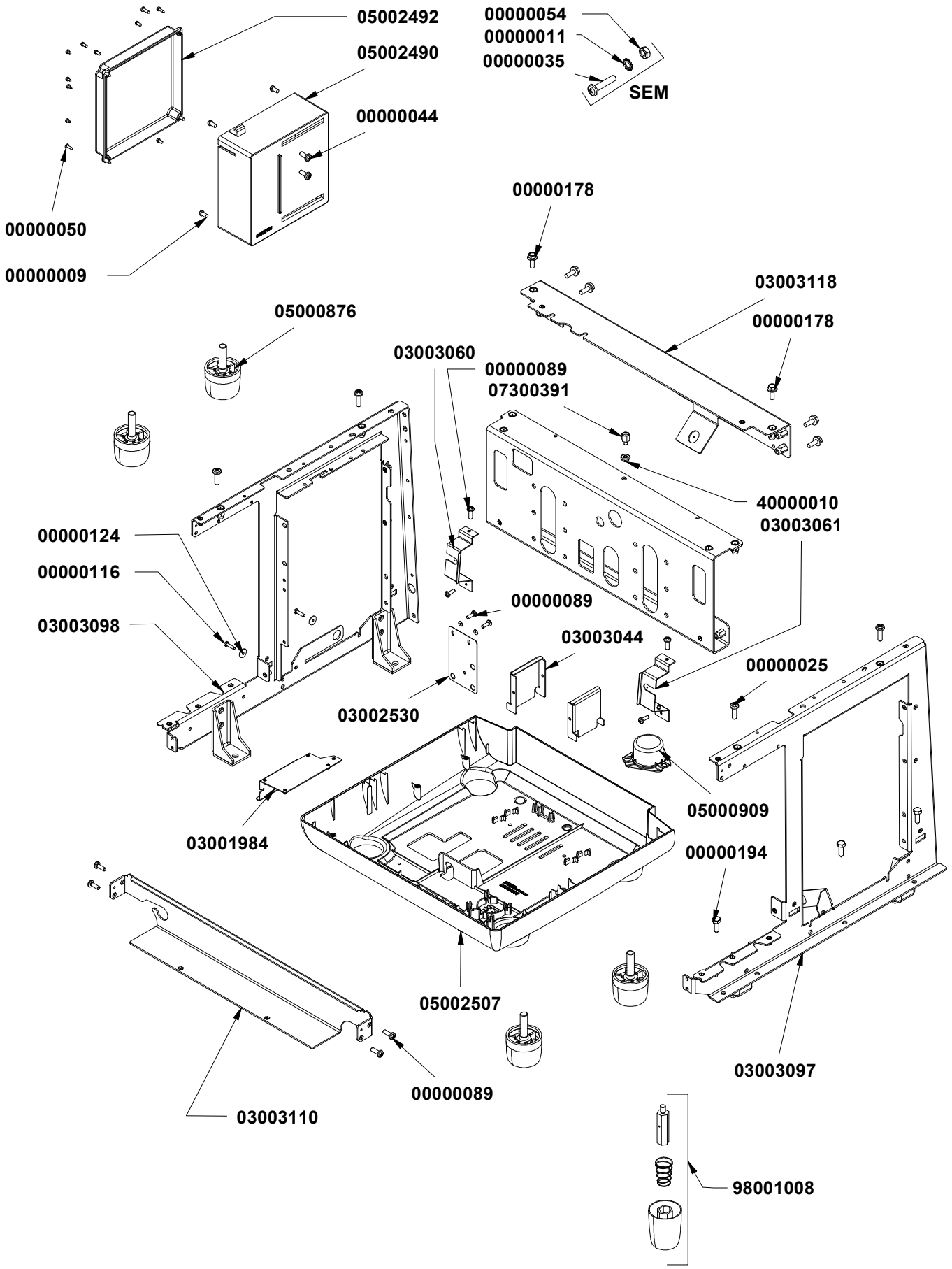

# COMPONENTI ELETTRICI ED ELETTRONICI

## ELECTRONIC & ELECTRICAL PARTS

APPIA LIFE COMPACT

VOL

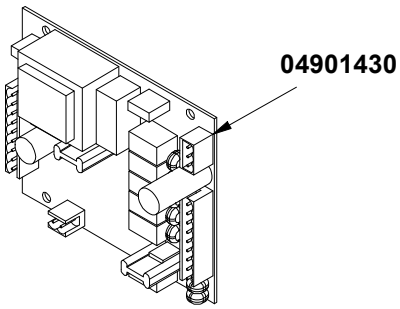


SEM

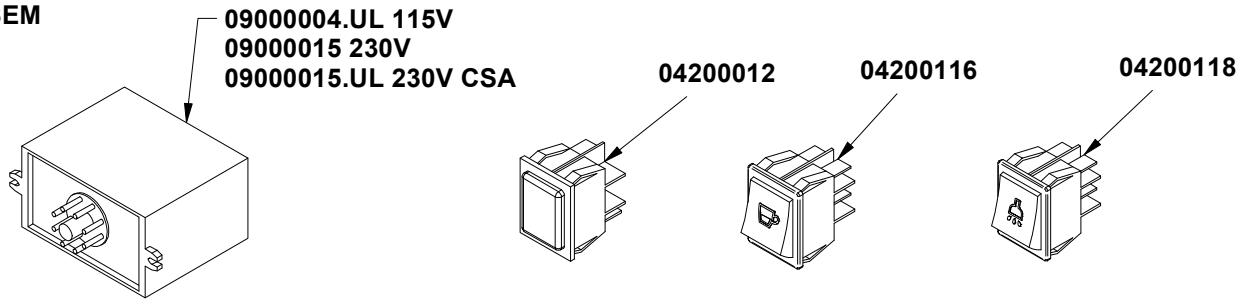


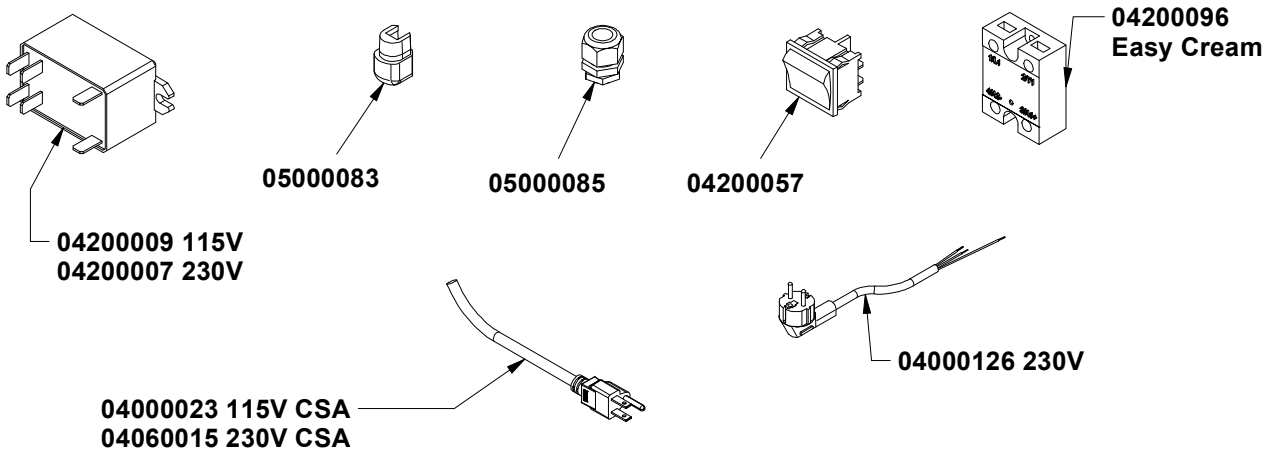


| ELECTRICAL COMPONENTS | | |
|---|---|---|
| **Code** | **Description** | **Descrizione** |
| 04000368 | Supplementary wiring | Cablaggio supplementare |
| 04000395 | Cupwarmer con. bridge | Ponticello scaldatazze |
| 04000806 | Cable cupwarmer | Cavo scaldatazze |
| 04000816 | Wiring cupwarmer | Cablaggio scaldatazze |
| 04000819 | Wiring VOL | Cablaggio VOL |
| 04000818 | Wiring SEM | Cablaggio SEM |

| CODE | DESCRIPTION | DESCRIZIONE | END VALIDITY |
|---|---|---|---|
| 00000009 | GALV. SELF-TAPPING SCREW 3,5x6,5 MUSTAD | VITE AUTOF 3,5x8 Z.B. HILO | |
| 00000011 | STAINLESS STEEL KNURLED WASHER D4 | RONDELLA INOX M4 ZIGRINATA UNI 8842/A | |
| 00000025 | GALV. CROSS HEAD CAP SCREW AQ M6x20 | VITE AQ M6x20 TC T.CR. ZINC | |
| 00000035 | ZINC CROSS-HEAD/CAP SCREW M4X20 | VITE AQ M4x20 TC T.CR. ZINC | |
| 00000044 | SCREW M4x10 AQ TC T.CR. ZINC | VITE AQ M4x10 TC T.CR. ZINC | |
| 00000047 | CROSS HEAD CAP SELF-TAPPING SCREW 2,9x6,5 | VITE AUTOF 2,9x6,5 TC/T.CR. | |
| 00000048 | SELF-THREADING SCREW 2.9x4.5 TC/T.CR. | VITE AUTOF 2,9x4,5 TC/T.CR. | |
| 00000050 | SCREW 3,5x12 TC/T.CR. | VITE AUTOF 3,5x12 TC/T.CR. | |
| 00000054 | NUT M4 HIGH GALVANISED NUT | DADO AQ M4 ALTO ZINCATO | |
| 00000063 | WASHER AQ D 10X21X2 ZN | RONDELLA AQ D 10x21x2 ZN | |
| 00000089 | SS CROSS HEAD CAP SCREW M4x12 | VITE INOX M4x12 TC TCR DIN7985 | |
| 00000094 | STAINLESS STEEL HEX CAP SCREW M8x20 | VITE INOX M8x20 TE 5739 | |
| 00000104 | SS CROSSHEAD COUNTERSUNK SCREW M4x10 | VITE INOX M4x10 TSP TCR DIN965 | |
| 00000110 | SS CROSS-HEAD CAP SCREW M4X20 7985 | VITE INOX M4x20 TC T.CR. 7985 | |
| 00000116 | GALVANISED HEX CAP SCREW AQ M4x16 | VITE AQ M4x16 TE ZINC | |
| 00000118 | SS HEX SOCKET CAP SCREW M4x12 | VITE INOX M4x12 TCEI 5931 | |
| 00000124 | GALVANISED WASHER D4 3x16x1.5 | RONDELLA AQ D4.3x16x1.5 ZINC. | |
| 00000128 | STAINLESS STEEL HEX CAP SCREW M8x10 | VITE INOX M8x10 TE TUTTO FIL. | |
| 00000160 | STAINLESS WASHER D4X12 | RONDELLA INOX D4x12x1 UNI 6593 | |
| 00000169 | SS SELF-THREDING SCREW 2,9x13 TSP/TCR | VITE AUTOF INOX 2,9x13 TSP/TCR | |
| 00000175 | SS CROSS HEAD CAP SCREW M4X10 | VITE INOX M4x10 TC TCR | |
| 00000176 | FLAT WASHER ZB 13 6592/125 | ROND. ZB PIANA Di15 6592/125 | |
| 00000178 | GALV. FLANGED KNURLED HEX CAP SCREW 8.8 M6x16 | VITE AQ 8.8 M6x16 TE FLANG. | |
| 00000194 | 10 ZINC HEX-HEAD CHIPBOARD SCREW 6X20 | VITE TRUCIOL. 6x20 T.ES.10 ZIN | |
| 00000197 | STAINLESS HEX SOCKET CAP SCREW M6x8 | VITE INOX M6x8 TCEI ISO 4762 | |
| 00000213 | SCREW AUTO 4,2x16 TC T.CR. ZIN | VITE AUTOF 4,2x16 TC T.CR. ZIN | |
| 00000217 | STAINLESS STEEL SCREW TE CH9 + TC FOR SHOWER | VITE INOX M6 LT=20 TE CH9 + TC x DOCCIA | |
| 00000221 | SECURITY FLAT WASHER INOX M6 CONICAL | RONDELLA DI SICUREZZA INOX M6 SCHNORR CONICA | |
| 00000230 | COPPER WASHER SEAL 14X18X1.5 | RONDELLA GUARNIZIONE RAME RICOTTO 14x18x1.5 | |
| 00000236 | STAINLESS STEEL SCREW M4x16 TSP TCR | VITE INOX M4x16 TSP TCR | |
| 00300001 | BRASS NUT 1/4 GAS SPESSOR 5 | DADO OT 1/4 GAS SPESS.5 CH18 | |
| 00300005 | BRASS NUT 1/8 GAS SPESSOR 4 | DADO OT 1/8 GAS SPESS.4 CH13 | |
| 00300002.1 | NUT OT 1/4 GAS | DADO OT 1/4 GAS MAGGIORATO 0.3mm SPESS.3 CH18 | |
| 00300013 | DADO OT 3/8 GAS SPESS.4 | DADO OT 3/8 GAS SPESS.4 CH20 | |
| 00300021 | SS SLOTTED COUNTERSUNK SCREW M6X18 DIN963 | VITE INOX M6x18 TSP TC DIN963 | |
| 01000019 | SS HOSE 1/4 FF L= 500 | TUBO FLESS.INOX 1/4 F.F. L=500 | |
| 01000023 | ANTI VACUUM VALVE | VALVOLINA SFIATO | |
| 01000090 | RETAINING VALVE CO10 | VALVOLINA DI RITEGNO D.10 | |
| 01000625 | BOILER INSULATION | ISOLANTE CALDAIA | |
| 01300004 | VOLUMETRIC PUMP 50 lt/h | POMPANTE VOLUMETRICO 50 lt/h OT-57 | |
| 02060010 | COPPER GASKET O RING 8.3x13x1.9 ND8 | OR RAME 8,3x13xh1,9 DN8 | |
| 02060015 | GASKET FOR HEATING ELEMENT 067x054x2 | GUARNIZIONE PTFE 067x054x2 | |
| 02280020.C | GUARNIZ. SOTTOCOPPA 72X57X6.8 TIPO C 72/75 | GUARNIZ. SOTTOCOPPA 72X57X6.8 TIPO C 72/75 ShA | |
| 02280020.V | GUARNIZ. SOTTOCOPPA CONICAH8 V - NBR 82/8 | GUARNIZ. SOTTOCOPPA CONICA H7.8 V - NBR 82/84 ShA | |
| 02280032 | GASKET O RING 114 D.15 EP 851 | GUARN. OR 114 D.15 EP 851 | |
| 02290016 | GASKET OR D 9,5 R5 SILICON RED | GUARN. OR D 9,5 R5 SILICONE R | |
| 03000066 | DOCCIA INOX 56x5,5x 6 SALDATA Aisi304 | DOCCIA INOX 56x5,5x 6 SALDATA Aisi304 | |
| 03000072 | FILTER ONE COFFEE HIGH | FILTRO 1 CAFFE' ALTO 7gr. | |
| 03000073 | FILTER TWO COFFEE HIGH 14g | FILTRO 2 CAFFE' ALTO 14gr. | |
| 03000107 | BLIND FILTER | FILTRO CIECO | |
| 03000202 | CONDENSATION TRAY MASTER | VASCHETTA RACC.CONDENSA MASTER | |
| 03001769 | AURELIA RAISED CUP STAND | SUPP. TAZZINE INOX | |
| 03001984 | PUMP SUPPORT APPIA COMPACT | SUPPORTO POMPA | |
| 03001986 | SAFETY LOCK 2 GROUPS APPIA COMPACT | CHIUSURA SICUREZZA 2 GRUPPI | |
| 03001988 | DRIP TRAY APPIA COMPACT | PIATTO RACCOGLIACQUA | |
| 03001989 | WORKTOP NET 2 GR.APPIA COMPACT | RETINA PIANO LAVORO 2 GR. | |
| 03002530 | GAUGE SUPPORT AURELIA II | STAFFA SUP. MANOM. | |
| 03003044 | BOILER SUPPORT | LAMIERA SUPPORTO CALDAIA | |
| 03003060 | STAND LEFT STEAM TAP | SUPP. RUB. VAPORE SX STAMPATA | |
| 03003061 | STAND RIGHT STEAM TAP | SUPP. RUB. VAPORE DX STAMPATA | |
| 03003097 | APPIA19 RIGHT SIDE FRAME | FIANCO DX STAMPATO TELAIO | |
| 03003098 | APPIA19 LEFT SIDE FRAME | FIANCO SX STAMPATO TELAIO | |
| 03003105 | CONTROL BOX | INVOLUCRO COMANDI 2GR | |
| 03003110 | SUPERIOR SHEET CONTROL BOX | LAMIERA SUPP.INVOLUCRO COMANDI 2GR. | |
| 03003118 | SIDE SUPERIOR BACK SHEET | LAMIERA L SUP. POSTERIORE 2GR. | |
| 03003124 | FRONTAL PANEL LOW GROUPS | PARETE FRONTALE GR.BASSI | |
| 03003130 | BACK PANEL | CARENA RETRO | |
| 03003135 | CUPBOARD PLATE | PIATTO PORTATAZZE | |
| 04000010 | CAPACITOR 6 MICRO F | CONDENS. 6microF x 04500033 UL | |
| 04000011 | CAPACITOR 25 microF UL | CONDENS.25 microF UL 45x92 FASTON 6,3 CON CODOLO | |
| 04000023 | SUPPLY CABLE UL AWG3X16 USA PLUG SHEATH 90°C | CAVO ALIMENTAZ. UL AWG3x16 SJO SPINA USA DIRITTA 15A | |
| 04000126 | ELECTRIC CABLE 2MT CE SCHUKO PLUG 90° 3X1,5 | CAVO ELETTR. 2mt CE SPINA SCHUKO 90° 3x1,5 H05VV-F | |
| 04000368 | SUPPLEMENTARY WIRING SYSTEM | SUPPLEMENTO 4° GRUPPO | |
| 04000395 | BRIDGE CONNECTING HEATER RESISTANCE | PONTICELLO COLLEG. RESISTENZE SCALDATAZZE POT. | |
| 04000806 | CUPS WARMER WIRING 2-3 GR. APPIA | CABLAGGIO SCALDATAZZE 2-3 GR. | |

APPIA LIFE COMPACT

INPLUS
AUTORYZOWANY DYSTRYBUTOR
www.simonelligroup.pl

| CODE | DESCRIPTION | DESCRIZIONE | END VALIDITY | |
|---|---|---|---|---|
| 04000811 | CABLE 14 WAYS TOUCH PAD APPIA COMPACT | CAVO 14 VIE COLL.PULSANTIERA 2 GR COMPACT | | APPIA LIFE COMPACT |
| 04000816 | CUP WARMER SUPPLY WIRING | CABLAGGIO ALIMENTAZIONE SCALDA TAZZE | | |
| 04000819 | WIRING APPIA II COMPACT 2 GR. VOL | CABLAGGIO 2GR VOL | | |
| 04000818 | WIRING APPIA II COMPACT 2 GR. SEM | CABLAGGIO 2GR SEM | | |
| 04001500 | EASYCREAM BUTTON-MAIN BOARD CONN. CABLE | CAVO COLL. TASTO REMOTO - CENTRALINA EASY CREAM | | |
| 04001502 | REMOTE BUTTON CONNECTION CABLE - PANEL | CAVO COLL. TASTO REMOTO -PULSANTIERA | | |
| 04060015 | POWER CABLE AWG3x14 + PLUG 20A | CAVO ALIM. AWG3x14 SJO 90°C UL/CSA 2mt SPINA USA DR. | | |
| 04100012 | EV 2W 1/4 1/4 220-230V 50/60HZ VITON F1,5 CE | E.V. NC 2VIE 1/4-1/4 220-230V 50/60HZ VITON F1.5 CE | | |
| 04100017 | EV 3W DOWNL.1/8 220-230V 50/60HZ RUBY F1,5 CE | E.V. NC 3VIE BAS. SCAR. 1/8 220-230V 50/60Hz RUBY F1.5 CE | | |
| 04100018 | ELECTROVALVE 3 WAYS 110 UL | E.V. NC 3VIE BASETTA SCAR. 1/8 110-120V 60Hz RUBY F1.6 UL | | |
| 04100024 | 2 WAYS EV WITH REGULATOR | E.V. NC 2VIE 1/4 REGOLAT. 90° 230V 50/60Hz F.3 CE | | |
| 04100027 | EV 3W DRAIN 1/8 208-240V 60Hz RUBY D1,3 UL | E.V. NC 3VIE BASETTA SCAR. 1/8 208-240V 60Hz RUBY F1.3 UL | | |
| 04200007 | POWER RELAY 30A 230 V BIPOLAR | RELE' DI POTENZA 30A 230V BIPOLARE | | |
| 04200009 | POWER RELAY 30A 115 V BIPOLAR | RELE' DI POTENZA 30A 115 V BIPOLARE | | |
| 04200012 | RECTANGULAR RED LUMINOUS SIGNAL SYSTEM | SEGNALATORE LUMINOSO ROSSO RETTANGOLARE UL | | |
| 04200057 | ON/OFF SWITCH 10A UL 22x19 | INTERRUT. ACCENSIONE BIPOL. GRANDE 10A UL 22x19 | | |
| 04200096 | SOLID STATE RELAY 5-24VDC 24-240VAC 20A | RELE' STATICO 25A 250V 1out | | |
| 04200110 | WHITE LIGHTED BIPOLAR SWITCH UL 16A | INT. BIPOLARE LUMINOSO BIANCO RETTANGOLARE UL 16A | | |
| 04200116 | RECT. WHITE BRIGHT BIPOLAR SWITCH UL 16A | INT. BIPOLARE LUMINOSO BIANCO RETTANGOLARE UL 16A | | |
| 04200118 | RECT. WHITE BRIGHT BIPOLAR SWITCH UL 16A | INT. BIPOLARE LUMINOSO BIANCO RETTANGOLARE UL 16A | | |
| 04500033 | PUMP MOTOR 230V 50/60Hz | MOTORE EL. MASTER/PREMIER 2001 230V 50/60Hz 120W | | |
| 04500037 | ELECTRIC MOTOR 115V | MOTORE ELETTRICO 115V 50/60Hz 100W | | |
| 04900027 | VOLUMETRIC DOSER OTT. 1/4-1/4GAS | DOSATORE VOLUM. OTT. 1/4-1/4GAS -ATT. TEST. 2,8x0,5 | | |
| 04901410 | VOLUMETRIC VERSION 5 BUTTONS MODULE | SCHEDA EROG. 5 TASTI | | |
| 04901416 | BREWING BOARD 1 WATER BUTTON | SCHEDA EROGAZ. 1 TASTO ACQUA | | |
| 04901430 | 230VAC UNIVERSAL BOARD | CENTR. UNIVERSALE APPIA Life 230V | | |
| 05000063 | SAFETY VALVE COVER | COPRI VALVOLA SICUREZZA PA6 | | |
| 05000083 | CABLE BLOCK SR 11-2 | BLOCCACAVO SR 11-2 NERO | | |
| 05000085 | CABLE GLAND TECH-S M20 D.7-14+ NUT P-CT M20 | PRESSACAVO TEC-S M20 D.7-14 CON DADO P-CT M20 Es24 | | |
| 05000480 | DRAIN TRAY VA358 | VASCHETTA SCARICO | | |
| 05000815 | STEAM LEVER HANDLE | MANOPOLA VAPORE | | |
| 05000840 | FILTER HOLDER KNOB 2003 BLACK | MANOPOLA PORTAFILTRO 2003 NERO | | |
| 05000842 | FILTER HOLDER KNOB LOCK 2003 | CHIUSURA MANOPOLA PORTAFILTRO 2003 | | |
| 05000844 | BLACK RUBBER COVER FILTER HOLDER KNOB | RIVESTIMENTO GOMMA NERA MANOPOLA PORTAFILTRO | | |
| 05000876 | FOOT PRESSWORK '05 D.48 H=40 BICOMPONENT | STAMPAGG. PIEDE '05 D.48 H=40 BIC. x INSERTO MASCHIO | | |
| 05000909 | ABS SWITCH PROTECTION 2GR. | COPRI INTERRUTTORE CILINDRICO | | |
| 05001224.C | WATER MANOMETER CHROMED FRAME | MOSTRINA MANOMETRO CROMATA | | |
| 05002210 | FLAT ANGULAR WATER TRAY SUPPORT | SUPPORTO ANGOLARE PIATTO RACCOGLIACQUA | | |
| 05002228 | POURING UNIT DRAIN MANIFOLD | COLLETTORE SCARICO GRUPPI EROG | | |
| 05002490 | APPIA19 MAIN BOARD SUPPORT BOX | SCATOLA SUPPORTO CENTRALINA | | |
| 05002492 | APPIA19 MAIN BOARD SUPPORT COVER | COPERCHIO SCATOLA SUPPORTO CENTRALINA | | |
| 05002507 | BASE | BASAMENTO 2GR. | | |
| 05002528 | PUSHBUTTON GROUPCOVER HIGH GROUP | PULSANTIERA COPRIGRUPPO GR. ALTO GRIGIO | | |
| 05002530 | PUSHBUTTON GROUPCOVER LOW GROUP | PULSANTIERA COPRIGRUPPO GR. BASSO GRIGIO | | |
| 05002540.C | APPIA19 STEAM KNOB CHROME PLATED COVER | MOSTRINA MANOPOLA VAPORE | | |
| 05002542.C | APPIA19 EASYCREAM CHROME PLATED COVER | MOSTRINA PULSANTE EASY CREAM | | |
| 05002544 | COVER PLATE BREWING | MOSTRINA TASTO EROG. | | |
| 05002553 | LABEL "APPIA LIFE" TECHNO FLEX RED | ETICHETTA AD "APPIA LIFE" TECHNO FLEX ROSSO | | |
| 05002554 | COVER PLATE BUTTONS | MOSTRINA TASTI | | |
| 05080035 | PLASTIC COFFEE PRESS | PRESSA CAFFE' ABS NERO | | |
| 05340031 | NYLON GRILL 370x230 | GRIGLIA MODULO 370x230 | | |
| 06200008 | TWO WAYS SPOUT | BECCO DUE VIE OPEN | | |
| 06200084 | CROSSPIECE 5 WAYS BRASS "AURELIA" | CROCIERA 5 VIE OT-57 USA | | |
| 06200125 | CRUSIN FOUR DIRECTION 1/4 M OT-57 USA | CROCIERA 4 VIE 1/4M OT-57 USA | | |
| 07300009 | NUT CONNECTION 1/4 GAS | DADO RACCORDO 1/4 GAS | | |
| 07300012.M8 | CONNECTION 1/4 1/4 W/OR HOLE M8 | RACC. 1/4 1/4 GAS CON OR F.M8 OT-57 USA | | |
| 07300017 | FITTING 1/4 3/8 GAS OT. | RACCORDO 1/4M 3/8M GAS OT-57 USA | | |
| 07300051 | CONNECTION T 1/4 M-M-M CYLIN 464 | RACCORDO T 1/4 M-M-M CILIN. | | |
| 07300063 | TERMINAL D 11 CLOSED | TERMINALE CHIUSO D.11 | | |
| 07300067 | NUT CONNECTION 3/8 GAS D11 | DADO RACCORDO 3/8 GAS D11 OT-58 | | |
| 07300068 | CONNECTION L 3/8 M-M CYLIN 459 | RACCORDO L 3/8 M-M CILIN. | | |
| 07300092 | SINGLE SPOUT | BECCO UNA VIA CURVO OPEN | | |
| 07300097 | TERMINAL D.14 | TERMINALE CHIUSO D 14 OT-57 | | |
| 07300100.M8 | FITTING 1/4"M-1/4"M INT. M8 | ATTACCO SCAR. 1/4-1/4 + INT M8 OT-57 USA | | |
| 07300121 | CONNECTION L 1/4 M-M CYLIN. | RACCORDO L 1/4 M-M CILINDRICO | | |
| 07300125 | GIGLEUR M8X8 F.0.8 | GIGLER M8x8 F.0,8 OT-57 +TEA | | |
| 07300126 | GIGLEUR M8X8 F.1,5 | GIGLER M8x8 F.1,5 OT-57 +TEA | | |
| 07300127 | GIGLEUR M8X8 F.2,5 | GIGLER M8x8 F.2,5 | | |
| 07300128 | CAP 1/4 GAS | TAPPO 1/4 GAS AGG.31.01.89 OT-57 | | |
| 07300171 | TAPPO OT M20X1,5 GR. EROG. CAP | TAPPO OT M20X1,5 GR. EROG. | | |
| 07300183 | DIFFUSER h=3 BRASS | PADIGLIONE GRUPPO h=3 OT-57 | | |
| 07300183.4 | DIFFUSER h=4 BRASS | PADIGLIONE GRUPPO h=4 OT-58 | | |
| 07300183.5 | DIFFUSER h=5 BRASS | PADIGLIONE GRUPPO h=5 OT-58 | | |
| 07300223 | INFUSION CHAMBER COVER PLUG | TAPPO CHIUS. CAMERA INFUSIONE | | |
| 07300226 | GIGLEUR M8X8 F.2 | GIGLER M8x8 F.2,0 OT-57 +TEA | | |

INPLUS
AUTORYZOWANY DYSTRYBUTOR
www.simonelligroup.pl

| CODE | DESCRIPTION | DESCRIZIONE | END VALIDITY |
|---|---|---|---|
| 07300227 | BRASS WASHER D.26X13,5X1,5 | RONDELLA OT D.26x13,5x1,5 | |
| 07300229 | GIGLEUR M8X8 F.0,5 | GIGLER M8x8 F.0,5 OT-57 +TEA | |
| 07300231 | GIGLEUR M8X8 F.1,8 | GIGLER M8x8 F.1,8 | |
| 07300355 | TAP FORK | FORCELLA RUBINETTO 99 | |
| 07300362 | STRAIGHT FITTING 1/4 | RACCORDO DIR. 1/4 M-CALZ.6 340 | |
| 07300365 | T FITTING 1/4 FFM | RACCORDO T 1/4 M-F-F | |
| 07300382 | CONNECTION DIR. F 1/4 ACTUATOR | RACCORDO DIR. 1/4 F - CALZAM. | |
| 07300391 | EXTENSION FOR VA358 CUP WARMER FASTENING | PROLUNGA FISSAGGIO SCALDATAZZE | |
| 07300601 | FILTER HOLDER KNOB INSERTION 2003 STAINLESS | INSERTO MANOPOLA PORTAFILTRO 2003 INOX (Aisi303) | |
| 07300612 | CONNECT. 1/4 1/4 GAS WITH OR + VALVE LOCK | RACCORDO 1/4 1/4 GAS CON OR + BLOCCA VALV. RITEGNO | |
| 07300810 | SPINOTTO RUB.VAPORE | SPINOTTO RUB.VAPORE AURELIA II | |
| 07300859 | G3/8" MALE-MALE FITTING WITH ORIFICE DIAM 3mm | RACCORDO 3/8M-3/8M GIGLER F.3 OT-57 | |
| 08000015 | SEEGER RING RS 5 STAINLESS STEEL | ANELLO SEEGER TIPO RS 5 INOX | |
| 08000017 | FILTER HOLDER SPRING INOX | MOLLA BLOCCA FILTRO ACC.INOX | |
| 08000034 | HOSE CLAMPS D12 | FASCETTA STRINGITUBO D12 | |
| 09000004 | SWITCHBOARD SELF-LEVEL 115V | CENTRALINA AUTOLIVELLO 115V | |
| 09000005 | LEVEL PROBE L = 130 | SONDA AUTOLIVELLO COMP. L=130 | |
| 09000015 | AUTO WATER FILL CIRCUI 230V | CENTRALINA AUTOLIVELLO 230V | |
| 09000015.UL | AUTOLEVEL CONTROL BOARD UL 230V | CENTRALINA AUTOLIVELLO UL 230V | |
| 09000016 | TAP CONNECTION SUPPLY 3/8 M-F | RUBINET. SFERA ALLACCIO RETE 3/8 M-F MINI | |
| 09000018 | DISPENSER TAP 1/4 M-F | RUBINET. SFERA DISTRIBUTORE 1/4 M-F A FARFALLA | |
| 09100003 | DOUBLE SCALE GAUGE | MANOMETRO DOPPIA SCALA 2,5:15 D.60 | |
| 09200006 | PRESSOSTAT CE/UL 30A 400V | PRESSOSTATO MACCHINA CE/UL TRIF. 30A 400V | |
| 09500004 | AUTOMATIC THERMOSTAT 135°C | TERMOSTATO R.MAN. 135°C | |
| 09500022 | 75°C AUTOMATIC RESET TEMPERATURE SWITCH | TERMOSTATO R.AUT. 75°C | |
| 11600004 | SILICONE PIPE 5x9 (1 MT= 50GR ) | TUBO SILICONE 5x9 60Sh PEROX BIANCO SEMITRASPARENTE | |
| 11740001 | TEFLON PIPE 6/4 | TUBO TEFLON 6/4 | |
| 40000010 | NUT M6 WITH WELD ZINCKED WASHER | DADO AQ M6 RONDELLA SALDATA | |
| 98001008 | KIT TALL FEET 2006 (4 PCS.) | KIT PIEDI ALTI 2006 (4 pz.) | |
| 98004001 | FILTER INOX DIAM. 8 | FILTRO INOX DIAM. 8 | |
| 98004016 | STAINLESS FILTER DIAM. 12 | FILTRO INOX DIAM. 12 | |
| 98005021 | COMPLETE ERGONOMIC FILTERHOLDE1 SPOUT | PORTAFILTRO INCLINATO COMP. 1 VIA N.S. | |
| 98005022 | COMPLETE FILTERHOLDER 2 WAYS ERGONOMIC | PORTAFILTRO INCLINATO COMP. 2 VIE N.S. | |
| 98005024 | TILTED FILTERHOLDER +HANDLE | CORPO PORTAFILTRO INCLINATO + MANOPOLA N.S. | |
| 98013020 | SAFETY VALVE 1/4 1.8 BAR | VALVOLA SICUREZZA A5 1/4 TARATA 1,8 BAR | |
| 98030065 | TUBE D.8 1/4 1/4 L=50 | TUBO D.8 1/4 1/4 L=59.5 | |
| 98030075 | CAPILLARY TUBE 1/8-1/4 0,9X2X400 MANOM.-PUMP | TUBO CAPILLARE 1/8-1/4 0,9x2x400 MANOMETRO- POMPA | |
| 98030165 | TUBE 1/4 1/4 SEM | TUBO 1/4 1/4 MODIFICA SEMIAUT | |
| 98030260 | LEFT UPPER TUBE 3/8 3/8 LOW GR. | TUBO SUP.SX 3/8 3/8 GR.BASSO | |
| 98030261 | UPPER RIGHT TUBE 3/8 3/8 LOW GR. | TUBO SUP.DX 3/8 3/8 GR.BASSO | |
| 98030262 | LOWER TUBE 3/8 3/8 LOW GR. | TUBO INF. 3/8 3/8 GR.BASSO | |
| 98030264 | UPPER RIGHT TUBE 3/8 3/8 HIGH GR. | TUBO SUP.SX 3/8 3/8 GR.ALTO | |
| 98030265 | UPPER TUBE 3/8-3/8 LOW GR. | TUBO SUP.DX 3/8 3/8 GR.ALTO | |
| 98030266 | LOWER TUBE 3/8 3/8 HIGH GR. | TUBO INF. 3/8 3/8 GR.ALTO | |
| 98030272 | CROSSPIECE PRESSOSTAT-MANOMETER | CROCIERA PRESSOSTATO-MANOMETRO | |
| 98030274 | TUBE 3/8-1/4 BOILER-T H.W. MIXER EV | TUBO 3/8-1/4 CALDAIA-T MISCELATORE A. CALDA | |
| 98030292 | INT. TEFLON TUBE EXCHANGER D.6 X 160 MM. | TUBO TEFLON INT. SCAMBIATORE D.6 x 160 mm. | |
| 98030630 | WELDED BOILER | CALDAIA SALDATA | |
| 98030752 | CROSSPIECE | CROCIERA 2GR. | |
| 98030754 | LEVEL SOLENOID VALVE-BOILER LOAD TAP | TUBO E.V. LIVELLO-RUB. CARICO CALDAIA | |
| 98030756 | HYD. GROUP CON. PIPE - RIGHT EXCHANGER | TUBO COLL. GR.IDRAUL.- SCAMB. DX | |
| 98030758 | HYD. GROUP CON. PIPE - LEFT EXCHANGER | TUBO COLL. GR.IDRAUL.- SCAMB. SX | |
| 98030760 | LEVELSOLENOID VALVE TUBE-CROSSPIECE | TUBO E.V. LIVELLO-CROCIERA | |
| 98030762 | SAFETY VALVE CONNECTION PIPE | TUBO COLL. VALVOLA SICUREZZA | |
| 98030766 | EASY CREAM SOLENOID VALVE PIPE - RIGHT WAND | TUBO E.V. EASY CREAM - LANCIA DX | |
| 98120001 | NEPLAX VITON 16,5 BAR VALVE 1/8 HOSE CLAMP | VALVOLA NEPLAX VITON 16,5 BAR 1/8 - PORTAGOMMA | |
| 98060000000250 | STEAM WAND + STEAM TAP ASSEMBLY | ASS. RUBINETTO VAPORE + LANCIA VA. CON DADO ALTO | |
| 98060000000251 | ASS. STEAM TAP + STEAM WAND HIGH NUT 1,2 | ASS. RUB. VAPORE + LANCIA VAP. DADO ALTO BECCO 1,2 | |
| 98060000000252 | ASS. STEAM TAP + COOL STEAM WAND HIGH NUT | ASS. RUB. VAPORE + LANCIA VAP. FREDDA DADO ALTO | |
| 980100000020060000 | RIGHT SIDE PANEL COMPLETE ASSEMBLY | ASSIEME FIANCO DX | |
| 980100000020070000 | LEFT SIDE PANEL COMPLETE ASSEMBLY | ASSIEME FIANCO SX | |
| 980300000007550000 | COMPLETE BOILER ASSEMBLY | ASSIEME CALDAIA COMP. | |
| 980400000005000000 | POURING GROUP ASSEMBLY | ASSIEME GRUPPO EROG. | |
| 980400000005020000 | RIGHT POURING GROUP ASSEMBLY | ASSIEME GRUPPO EROG. DX | |
| 981600000013150001 | PUSHBUTTON ASSEMBLY LOW GROUPS BLACK | ASS. PULSANT.COMP. 2GR COMPACT V NERO GR.BASSI | |
| 981600000001315002 | PUSHBUTTON ASSEMBLY HIGH GROUPS BLACK | ASS. PULSANT.COMP. 2GR COMPACT V NERO GR.ALTI | |
| 981600000001315003 | PUSHBUT. ASS.+EASYCREAM LOW GROUPS BLACK | ASS. PULSANT.COMP. V+EASYCREAM NERO GR.BASSI | |
| 981600000001315004 | PUSHBUT. ASS.+EASYCREAM HIGH GROUPS BLACK | ASS. PULSANT.COMP. V+EASYCREAM NERO GR.ALTI | |
| 98170000000010 | PUMP ASSEBLT 50lt+FITTINGS | ASSIEME POMPANTE OT 50lt + RACCORDI | |
| 98240014100090 | HEATING ELEMENT 2600W | RESISTENZA COMPLETA DI DADI 2600W | |
| KRIC0002 | LONG LIFE CONICAL COVER GASKET (6 PCS) | GUARNIZIONE SOTTOCOPPA CONICA LONG LIFE (6 PZ9 | |

APPIA LIFE COMPACT

INPLUS
AUTORYZOWANY DYSTRYBUTOR
www.simonelligroup.pl